Datasheet - AES 1165.3-2316-2

Guard door monitors and Safety control modules for Emergency Stop applications / Micro Processor based safety controllers (Series AES) / AES 116x

(Minor differences between the printed image and the original product may exist!)

- Monitoring of BNS range magnetic safety sensors
- 1 safety contact, STOP 0

Ordering details

Product type description	AES 1165.3-2316-2
Article number	101147946
EAN code	4030661145051
eCl@ss	27-37-19-01

Approval

Approval	BG USA/CAN

Classification

Standards	EN ISO 13849-1, IEC 61508
PL	up d
Control category	up 3
PFH value	1.0 x 10^{-7}/h
- notice	up to max. 50.000 switching cycles/year and at max. 80% contact load
SIL	up 2
Mission time	20 Years

Global Properties

Product name	AES 116x
Standards	IEC/EN 60204-1, IEC 60947-5-3, EN 954-1, BG-GS-ET-14, BG-GS-ET-20
Compliance with the Directives (Y/N) CE	Yes
Climatic stress	IEC 60947-5-3, BG-GS-ET-14
Mounting	snaps onto standard DIN rail to EN 60715
Terminal designations	IEC/EN 60947-1
Materials	
- Material of the housings	Plastic, glass-fibre reinforced thermoplastic, ventilated
- Material of the contacts	Ag-Ni, 10+0,2 µm gold flashed
Weight	165 g
Start conditions	Automatic
Start input (Y/N)	No
Feedback circuit (Y/N)	No
Start-up test (Y/N)	No
Reset after disconnection of supply voltage (Y/N)	Yes
Automatic reset function (Y/N)	Yes
Reset with edge detection (Y/N)	No
Pull-in delay	
- ON delay with automatic start	adjustable 0,1 / 1.0 s
Drop-out delay	
- Drop-out delay in case of emergency stop	< 50 ms

Mechanical data

Connection type	Screw connection
Cable section	
- Min. Cable section	0,25 mm²
- Max. Cable section	2.5 mm²
Pre-wired cable	rigid or flexible
Tightening torque for the terminals	0,6 Nm
Detachable terminals (Y/N)	No
Mechanical life	20.000.000 operations
Electrical lifetime	150.000 operations for 230 VAC, 5 A (cos φ = 1)
restistance to shock	30 g / 11 ms
Resistance to vibration To EN 60068-2-6	10...55 Hz, Amplitude 0,35 mm, ± 15 %

Ambient conditions

Ambient temperature	
- Min. environmental temperature	0°C
- Max. environmental temperature	+55 °C
Storage and transport temperature	
- Min. Storage and transport temperature	−25 °C
- Max. Storage and transport temperature	+70 °C
Protection class	
- Protection class-Enclosure	IP40
- Protection class-Terminals	IP20
- Protection class-Clearance	IP54
Air clearances and creepage distances To IEC/EN 60664-1	
- Rated impulse withstand voltage U_{imp}	4.8 kV
- Overvoltage category	III To VDE 0110
- Degree of pollution	2 To VDE 0110

Electromagnetic compatibility (EMC)

EMC rating	10 V/m

Electrical data

Rated DC voltage for controls	
- Min. rated DC voltage for controls	-
- Max. rated DC voltage for controls	-
Rated AC voltage for controls, 50 Hz	
- Min. rated AC voltage for controls, 50 Hz	20.4 V
- Max. rated AC voltage for controls, 50 Hz	26.4 V
Rated AC voltage for controls, 60 Hz	
- Min. rated AC voltage for controls, 60 Hz	20.4 V
- Max. rated AC voltage for controls, 60 Hz	26.4 V
Contact resistance	max. 100 mΩ
Power consumption	< 5 W
Type of actuation	DC
Switch frequency	1 Hz
Rated insulation voltage U_i	250 V
Rated operating voltage U_e	24 VAC -15% + 10%
Thermal test current I_{the}	6 A
Operating current I_e	0,2 A
Electronic protection (Y/N)	No

Inputs

Monitored inputs	
- Short-circuit recognition (Y/N)	Yes
- Wire breakage detection (Y/N)	Yes
- Earth connection detection (Y/N)	Yes
Number of shutters	1 piece
Number of openers	2 piece
Input resistance	approx. 2000 Ω at GND
Input signal "1"	10 ... 30 VDC
Input signal "0"	0 ... 2 VDC
Cable length	1000 m with 0,75 mm² (for Rated voltage)

Outputs

Stop category	0
Number of safety contacts	1 piece
Number of signalling outputs	2 piece
Switching capacity	
- Switching capacity of the safety contacts	min.10 mA, max. 6 A
- Switching capacity of the signaling/diagnostic outputs	2 potential-free contacts
Fuse rating	
- Protection of the safety contacts	6 A gG D-fuse
Fuse rating for the signaling/diagnostic outputs	short-circuit proof, p-type
Signalling output	Y1: Guard system 1 Authorized operation Y2: Guard system 2 Authorized operation
Utilisation category To EN 60947-5-1	AC-15: 230 V / 3 A DC-13: 24 V / 2 A
Number of undelayed semi-conductor outputs with signaling function	2 piece

Number of undelayed outputs with signaling function (with contact)	
Number of delayed semi-conductor outputs with signaling function.	0 piece
Number of delayed outputs with signalling function (with contact).	0 piece
Number of secure undelayed semi-conductor outputs with signaling function	0 piece
Number of secure, undelayed outputs with signaling function, with contact.	0 piece
Number of secure, delayed semi-conductor outputs with signaling function	0 piece
Number of secure, delayed outputs with signaling function (with contact).	0 piece

LED switching conditions display

LED switching conditions display (Y/N)	Yes
Number of LED´s	1 piece

Integral system diagnosis ISD

Integral system diagnosis ISD

- The following faults are registered by the safety monitoring modules and indicated by ISD
- Failure of door contacts to open or close
- Cross-wire or short-circuit monitoring of the switch connections
- Interruption of the switch connections
- Failure of the safety relay to pull-in or drop-out
- Fault on the input circuits or the relay control circuits of the safety monitoring module

Miscellaneous data

Applications	Safety sensor Guard system

Dimensions

Dimensions	
- Width	22.5 mm
- Height	100 mm
- Depth	121 mm

notice

Inductive loads (e.g. contactors, relays, etc.) are to be suppressed by means of a suitable circuit.

notice - Wiring example

To secure 2 guard doors up to PL d and Category 3

Monitoring 2 guard door(s), each with a magnetic safety sensor of the BNS range

If one or two external relays or contactors are used to switch the load, the system can then only be classified in Category 3 to EN ISO 13849-1, if exclusion of the fault “Failure of the external contactors” can be substantiated and is documented, e.g. by using reliable down-rated contactors. A second contactor leads to an increase in the level of security by redundant switching to switch the load off.

Expansion of enable delay time:
The enable delay time can be increased from 0,1 s to 1 s by changing the position of a jumper link connection under the cover of the unit.

The wiring diagram is shown with guard doors closed and in de-energised condition.

The ISD tables (Intergral System Diagnostics) for analysis of the fault indications and their causes are shown in the appendix.

Documents

Operating instructions and Declaration of conformity (pl) 210 kB, 28.08.2013
Code: mrl_aes1165-3-2214-2316_pl

Operating instructions and Declaration of conformity (nl) 428 kB, 20.07.2010
Code: mrl_aes1165-3-2214-2316_nl

Operating instructions and Declaration of conformity (de) 801 kB, 22.02.2010
Code: mrl_aes1165-3-2214-2316_de

Operating instructions and Declaration of conformity (da) 209 kB, 09.07.2013
Code: mrl_aes1165-3-2214-2316_da

Operating instructions and Declaration of conformity (es) 711 kB, 09.04.2010
Code: mrl_aes1165-3-2214-2316_es

Operating instructions and Declaration of conformity (pt) 223 kB, 10.02.2014
Code: mrl_aes1165-3-2214-2316_pt

Operating instructions and Declaration of conformity (en) 766 kB, 05.03.2010
Code: mrl_aes1165-3-2214-2316_en

Operating instructions and Declaration of conformity (fr) 472 kB, 28.06.2011
Code: mrl_aes1165-3-2214-2316_fr

Operating instructions and Declaration of conformity (it) 437 kB, 02.01.2012
Code: mrl_aes1165-3-2214-2316_it

Operating instructions and Declaration of conformity (jp) 834 kB, 07.06.2011
Code: mrl_aes1165-3-2214-2316_jp

Wiring example (99) 20 kB, 21.08.2008
Code: Kaes1I04

Wiring example (99) 17 kB, 22.08.2008
Code: Kaes1I03

Wiring example (99) 13 kB, 22.08.2008
Code: kaes1I21

ISD tables (Intergral System Diagnostics) (de) 51 kB, 29.07.2008
Code: i_ae2p01

ISD tables (Intergral System Diagnostics) (en) 35 kB, 29.07.2008
Code: i_ae2p02

BG-test certificate (en) 134 kB, 03.11.2011
Code: z_135p02

BG-test certificate (de) 136 kB, 03.11.2011
Code: z_135p01

BG-test certificate (en) 265 kB, 15.04.2016
Code: z_113p02

BG-test certificate (de) 71 kB, 04.03.2016
Code: z_113p01

EAC certification (ru) 833 kB, 05.10.2015
Code: q_6042p17_ru

Images

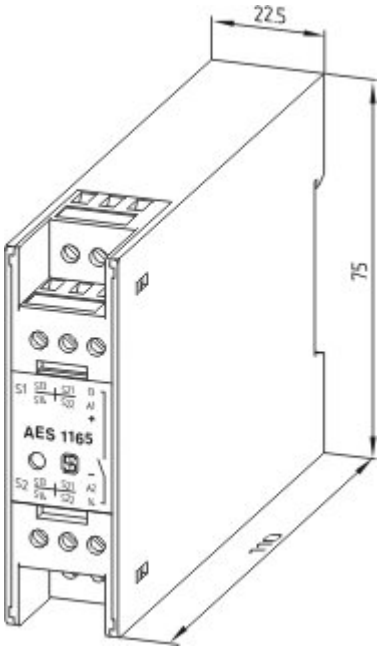

Dimensional drawing (basic component)

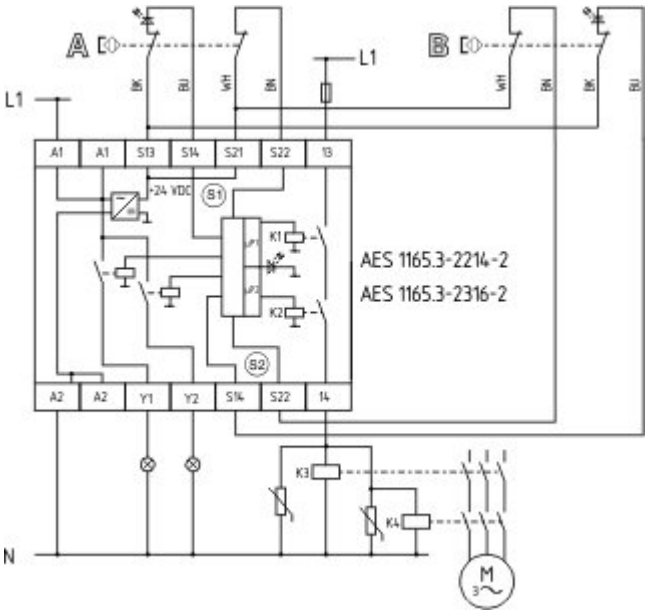

Wiring example

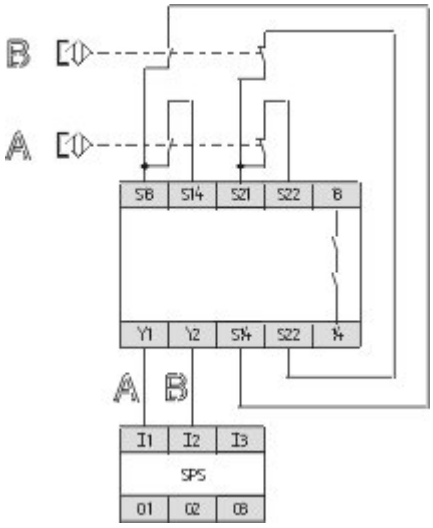

Wiring example

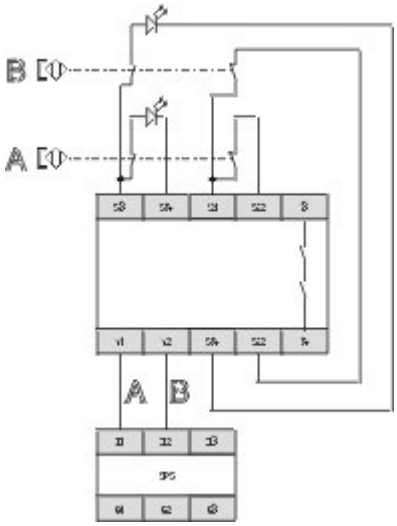

Wiring example

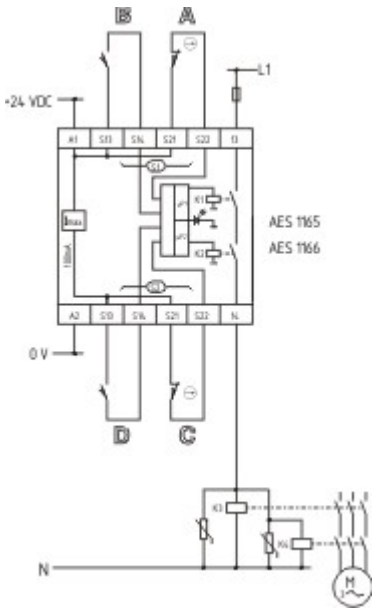

Wiring example

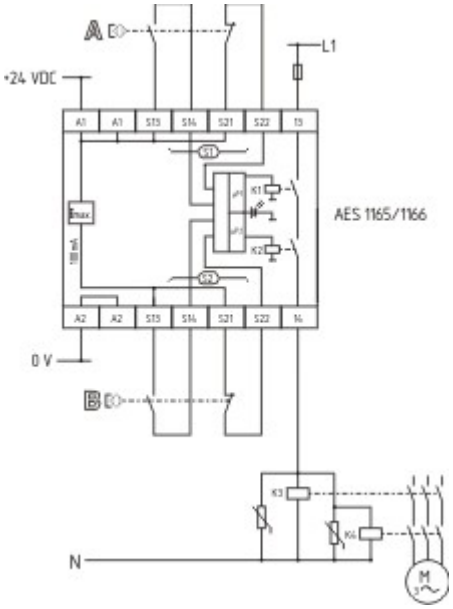

Wiring example